THE CITY OF NORFOLK

# FLOOD MITIGATION PROJECT

***Photographs of the House***

Property Address: 4000 Mayflower Avenue

Property Owner: Jennifer Barbour

FRONT

BACK

LEFT

RIGHT

ENGINEERING CONCEPTS, INC.
"Creating Success"
20 S. Roanoke Street, PO Box 619
Fincastle, Virginia 24090
540.473.1253 fax 540.473.1254

\4000 Mayflower Avenue Photos.doc

U.S. DEPARTMENT OF HOMELAND SECURITY
FEDERAL EMERGENCY MANAGEMENT AGENCY
*National Flood Insurance Program*

## ELEVATION CERTIFICATE

**Important: Read the instructions on pages 1–9.**

OMB No. 1660-0008
Expiration Date: July 31, 2015

### SECTION A – PROPERTY INFORMATION

FOR INSURANCE COMPANY USE
Policy Number:
Company NAIC Number:

A1. Building Owner's Name Jennifer Courtney Barbour

A2. Building Street Address (including Apt., Unit, Suite, and/or Bldg. No.) or P.O. Route and Box No.
4000 Mayflower Avenue
City Norfolk State VA ZIP Code 23508

A3. Property Description (Lot and Block Numbers, Tax Parcel Number, Legal Description, etc.)
Site 6 Block 46 Colonial Place

A4. Building Use (e.g., Residential, Non-Residential, Addition, Accessory, etc.) Residential

A5. Latitude/Longitude: Lat. N 36d 52' 54.6" Long. W 076d 17' 37.5" Horizontal Datum: ☐ NAD 1927 ☒ NAD 1983

A6. Attach at least 2 photographs of the building if the Certificate is being used to obtain flood insurance.

A7. Building Diagram Number 8

A8. For a building with a crawlspace or enclosure(s):
a) Square footage of crawlspace or enclosure(s) 1,154 sq ft
b) Number of permanent flood openings in the crawlspace or enclosure(s) within 1.0 foot above adjacent grade 6
c) Total net area of flood openings in A8.b 588 sq in
d) Engineered flood openings? ☒ Yes ☐ No

A9. For a building with an attached garage:
a) Square footage of attached garage 0 sq ft
b) Number of permanent flood openings in the attached garage within 1.0 foot above adjacent grade 0
c) Total net area of flood openings in A9.b 0 sq in
d) Engineered flood openings? ☐ Yes ☐ No

### SECTION B – FLOOD INSURANCE RATE MAP (FIRM) INFORMATION

| B1. NFIP Community Name & Community Number | B2. County Name | B3. State |
|---|---|---|
| Norfolk 510104 | Independent City | VA |

| B4. Map/Panel Number | B5. Suffix | B6. FIRM Index Date | B7. FIRM Panel Effective/Revised Date | B8. Flood Zone(s) | B9. Base Flood Elevation(s) (Zone AO, use base flood depth) |
|---|---|---|---|---|---|
| 5101040090 | F | 12/16/2014 | 09/02/2009 | AE | 7.6 |

B10. Indicate the source of the Base Flood Elevation (BFE) data or base flood depth entered in item B9.
☐ FIS Profile ☒ FIRM ☐ Community Determined ☐ Other/Source: ____

B11. Indicate elevation datum used for BFE in Item B9: ☐ NGVD 1929 ☒ NAVD 1988 ☐ Other/Source: ____

B12. Is the building located in a Coastal Barrier Resources System (CBRS) area or Otherwise Protected Area (OPA)? ☐ Yes ☒ No
Designation Date: ____ ☐ CBRS ☐ OPA

### SECTION C – BUILDING ELEVATION INFORMATION (SURVEY REQUIRED)

C1. Building elevations are based on: ☒ Construction Drawings* ☐ Building Under Construction* ☐ Finished Construction
*A new Elevation Certificate will be required when construction of the building is complete.

C2. Elevations – Zones A1–A30, AE, AH, A (with BFE), VE, V1–V30, V (with BFE), AR, AR/A, AR/AE, AR/A1–A30, AR/AH, AR/AO. Complete Items C2.a–h below according to the building diagram specified in Item A7. In Puerto Rico only, enter meters.
Benchmark Utilized: ____ Vertical Datum: ____
Indicate elevation datum used for the elevations in items a) through h) below. ☐ NGVD 1929 ☐ NAVD 1988 ☐ Other/Source: ____
Datum used for building elevations must be the same as that used for the BFE.

| | | Check the measurement used. |
|---|---|---|
| a) Top of bottom floor (including basement, crawlspace, or enclosure floor) | 3.9 | ☒ feet ☐ meters |
| b) Top of the next higher floor | 12.1 | ☒ feet ☐ meters |
| c) Bottom of the lowest horizontal structural member (V Zones only) | ____ | ☐ feet ☐ meters |
| d) Attached garage (top of slab) | 5.7 | ☒ feet ☐ meters |
| e) Lowest elevation of machinery or equipment servicing the building (Describe type of equipment and location in Comments) | Above 10.6 | ☒ feet ☐ meters |
| f) Lowest adjacent (finished) grade next to building (LAG) | 3.5 | ☒ feet ☐ meters |
| g) Highest adjacent (finished) grade next to building (HAG) | 3.9 | ☒ feet ☐ meters |
| h) Lowest adjacent grade at lowest elevation of deck or stairs, including structural support | 3.6 | ☒ feet ☐ meters |

### SECTION D – SURVEYOR, ENGINEER, OR ARCHITECT CERTIFICATION

This certification is to be signed and sealed by a land surveyor, engineer, or architect authorized by law to certify elevation information. *I certify that the information on this Certificate represents my best efforts to interpret the data available.*
*I understand that any false statement may be punishable by fine or imprisonment under 18 U.S. Code, Section 1001.*

☒ Check here if comments are provided on back of form. Were latitude and longitude in Section A provided by a licensed land surveyor? ☒ Yes ☐ No
☐ Check here if attachments.

COMMONWEALTH OF VIRGINIA
JASON SCOTT CALDWELL
Lic. No 022744
LAND SURVEYOR

Certifier's Name Jason Scott Caldwell License Number 2744
Title Associate Company Name Engineering Concepts, Inc.
Address 20 S. Roanoke St. City Fincastle State VA ZIP Code 24090
Signature Date 1/18/2016 Telephone 540-473-1253

FEMA Form 086-0-33 (7/12) See reverse side for continuation. Replaces all previous editions.

U.S. DEPARTMENT OF HOMELAND SECURITY
FEDERAL EMERGENCY MANAGEMENT AGENCY
*National Flood Insurance Program*

## ELEVATION CERTIFICATE

**IMPORTANT:** Follow the instructions on pages 1–9.

OMB No. 1660-0008
Expiration Date: July 31, 2015

### SECTION A – PROPERTY INFORMATION

FOR INSURANCE COMPANY USE
Policy Number:
Company NAIC Number:

A1. Building Owner's Name Jennifer Courtney Barbour

A2. Building Street Address (including Apt., Unit, Suite, and/or Bldg. No.) or RO. Route and Box No.
4000 Mayflower Avenue
City Norfolk State VA ZIP Code 23508

A3. Property Description (Lot and Block Numbers, Tax Parcel Number, Legal Description, etc.)
Site 6 Block 46 Colonial Place

A4. Building Use (e.g., Residential, Non-Residential, Addition, Accessory, etc.) RESIDENTIAL

A5. Latitude/Longitude: Lat. N 36° 52' 54.6" Long. W 76° 17' 37.5" Horizontal Datum: ☐ NAD 1927 ☒ NAD 1983

A6. Attach at least 2 photographs of the building if the Certificate is being used to obtain flood insurance.

A7. Building Diagram Number 8

A8. For a building with a crawlspace or enclosure(s):
a) Square footage of crawlspace or enclosure(s) 1154 sq ft
b) Number of permanent flood openings in the crawlspace or enclosure(s) within 1.0 foot above adjacent grade 12
c) Total net area of flood openings in A8.b 840 sq in
d) Engineered flood openings? ☐ Yes ☒ No

A9. For a building with an attached garage:
a) Square footage of attached garage N/A sq ft
b) Number of permanent flood openings in the attached garage within 1.0 foot above adjacent grade —
c) Total net area of flood openings in A9.b — sq in
d) Engineered flood openings? ☐ Yes ☐ No

### SECTION B – FLOOD INSURANCE RATE MAP (FIRM) INFORMATION

| B1. NFIP Community Name & Community Number | B2. County Name | B3. State |
|---|---|---|
| Norfolk 510104 | Independent City | VA |

| B4. Map/Panel Number | B5. Suffix | B6. FIRM Index Date | B7. FIRM Panel Effective/Revised Date | B8. Flood Zone(s) | B9. Base Flood Elevation(s) (Zone AO, use base flood depth) |
|---|---|---|---|---|---|
| 0090 | F | 12/16/2014 | 09/02/2009 | AE | 7.6' |

B10. Indicate the source of the Base Flood Elevation (BFE) data or base flood depth entered in Item B9:
☐ FIS Profile ☒ FIRM ☐ Community Determined ☐ Other/Source: ____

B11. Indicate elevation datum used for BFE in Item B9: ☐ NGVD 1929 ☒ NAVD 1988 ☐ Other/Source: ____

B12. Is the building located in a Coastal Barrier Resources System (CBRS) area or Otherwise Protected Area (OPA)? ☐ Yes ☒ No
Designation Date: ____ / ____ / ____ ☐ CBRS ☐ OPA

### SECTION C – BUILDING ELEVATION INFORMATION (SURVEY REQUIRED)

C1. Building elevations are based on: ☐ Construction Drawings* ☐ Building Under Construction* ☒ Finished Construction
*A new Elevation Certificate will be required when construction of the building is complete.

C2. Elevations – Zones A1–A30, AE, AH, A (with BFE), VE, V1–V30, V (with BFE), AR, AR/A, AR/AE, AR/A1–A30, AR/AH, AR/AO. Complete Items C2.a–h below according to the building diagram specified in Item A7. In Puerto Rico only, enter meters.
Benchmark Utilized: PSM CITY OF NORFOLK 22 Vertical Datum: NAVD 1988
Indicate elevation datum used for the elevations in items a) through h) below. ☐ NGVD 1929 ☒ NAVD 1988 ☐ Other/Source: ____
Datum used for building elevations must be the same as that used for the BFE.

| | | Check the measurement used. |
|---|---|---|
| a) Top of bottom floor (including basement, crawlspace, or enclosure floor) | 3.9 | ☒ feet ☐ meters |
| b) Top of the next higher floor | 12.1 | ☒ feet ☐ meters |
| c) Bottom of the lowest horizontal structural member (V Zones only) | N/A | ☐ feet ☐ meters |
| d) Attached garage (top of slab) | N/A | ☐ feet ☐ meters |
| e) Lowest elevation of machinery or equipment servicing the building (Describe type of equipment and location in Comments) | 7.2 | ☒ feet ☐ meters |
| f) Lowest adjacent (finished) grade next to building (LAG) | 3.5 | ☒ feet ☐ meters |
| g) Highest adjacent (finished) grade next to building (HAG) | 3.9 | ☒ feet ☐ meters |
| h) Lowest adjacent grade at lowest elevation of deck or stairs, including structural support | 3.6 | ☒ feet ☐ meters |

### SECTION D – SURVEYOR, ENGINEER, OR ARCHITECT CERTIFICATION

This certification is to be signed and sealed by a land surveyor, engineer, or architect authorized by law to certify elevation information. *I certify that the information on this Certificate represents my best efforts to interpret the data available.*
*I understand that any false statement may be punishable by fine or imprisonment under 18 U.S. Code, Section 1001.*

☒ Check here if comments are provided on back of form. Were latitude and longitude in Section A provided by a licensed land surveyor? ☒ Yes ☐ No
☐ Check here if attachments.

COMMONWEALTH OF VIRGINIA
PLACE
WARD SEAL HOLMES
Lic. HEREIN
LAND SURVEYOR

Certifier's Name WARD M. HOLMES License Number 1403A
Title LAND SURVEYOR Company Name WARD M. HOLMES LAND SURVEYOR, P.C.
Address 9225 GRANBY STREET City NORFOLK State VA ZIP Code 23503
Signature Date 1-3-16 Telephone (757) 480-1230

FEMA Form 086-0-33 (Revised 7/12) See reverse side for continuation. Replaces all previous editions.

15N/30


ENGINEERING CONCEPTS, INC.
20 S. ROANOKE ST., PO BOX 619
FINCASTLE, VIRGINIA 24090
540.473.1253 FAX: 540.473.1254


| | | |
|---|---|---|
| Drawn MSMj | 4000 MAYFLOWER AVENUE COVER SHEET | SCALE: NONE |
| Designed ECI | | DATE: MAR 23, 2015 |
| Checked JSC | FLOOD MITIGATION CITY OF NORFOLK VIRGINIA | PROJECT: 14141 |
| Approved JSC | | 1 |

THE CITY OF NORFOLK

# FLOOD MITIGATION PROJECT

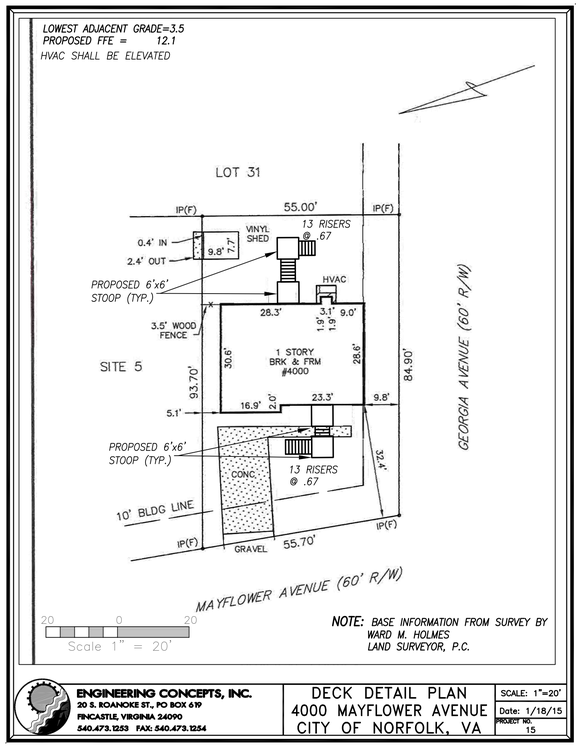


ENGINEERING CONCEPTS, INC.
20 S. ROANOKE ST., PO BOX 619
FINCASTLE, VIRGINIA 24090
540.473.1253 FAX: 540.473.1254

DECK DETAIL PLAN
4000 MAYFLOWER AVENUE
CITY OF NORFOLK, VA

SCALE: 1"=20'
Date: 1/18/15
PROJECT No. 15

THIS IS TO CERTIFY THAT I, ON JAN. 8, 2016, SURVEYED THE PROPERTY SHOWN HEREON AND THAT THE TITLE LINES AND PHYSICAL IMPROVEMENTS ARE AS SHOWN HEREON. THE IMPROVEMENTS STAND STRICTLY WITHIN THE TITLE LINES AND THERE ARE NO ENCROACHMENTS OF OTHER BUILDINGS EXCEPT AS SHOWN.

SIGNED: Ward M. Holmes

NOTES:
1) THE PROPERTY SHOWN HEREON APPEARS TO LIE IN "AE" (7,6) FLOOD ZONE ACCORDING TO F.E.M.A. MAP PANEL NO. 510104-0090F REVISED SEPT. 2, 2009.
2) THIS SURVEY WAS PERFORMED WITHOUT THE BENEFIT OF A TITLE REPORT, AND MAY NOT SHOW ANY/ALL EASEMENTS AFFECTING THE PROPERTY.

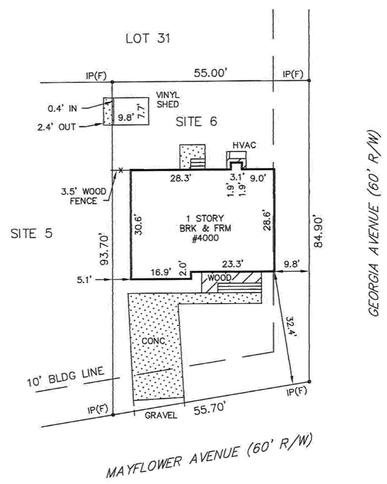


PHYSICAL SURVEY
OF
SITE 6, BLOCK 46
COLONIAL PLACE
NORFOLK, VIRGINIA
FOR
JENNIFER COURTNEY BARBOUR

DATE: JAN. 8, 2016
SCALE: 1" = 20'
NOTE: FOR PLAT SEE M.B. 4 PG. 36 NORFOLK, VA

COMMONWEALTH OF VIRGINIA
WARD M. HOLMES
LIC. No.1403
1-3-16
LAND SURVEYOR

WARD M. HOLMES
LAND SURVEYOR, P.C.
9225 GRANBY STREET
NORFOLK, VIRGINIA 23503
757-480-1230

DRAWN BY: WTL
PROJECT NO. 15-1130

960/103
(268)

## City of Norfolk

**City of Norfolk Standard Erosion & Sediment Control Notes**

1. Unless otherwise indicated, all vegetative and structural erosion and sediment control practices will be constructed and maintained according to minimum standards and specifications of the Virginia Erosion and Sediment Control Handbook (3rd Edition, 1992) and the City of Norfolk erosion and sediment control ordinance.
2. The contractor shall contact the City of Norfolk, Bureau of Environmental Services (664-4368) at least 48 hours prior to any land disturbing activity (including demolition) so that a preconstruction conference can be scheduled.
3. The contractor shall apply permanent or temporary soil stabilization to all denuded or disturbed areas within 7 days after final grade is reached on any portion of the site. Soil stabilization must also be applied to denuded or disturbed areas which may not be at final grade but which will remain undisturbed for longer than 14 days. Soil stabilization measures include vegetative establishment, mulching and the early application of gravel base material on areas to be paved.
4. All erosion and sediment control measures are to be placed prior to or as the first step in construction.
5. The contractor shall inspect all erosion control measures periodically and after each runoff producing rainfall event. Any necessary repairs to maintain the effectiveness of the erosion control devices and cleanup of sedimentation are the responsibility of the contractor and shall be made immediately.
6. The contractor shall limit site access by construction vehicles to entrances protected by a stone construction entrance (VESCH Std. & Spec. 3.02) or an approved comparable control measure. Sediment shall be removed from paved areas on a daily basis.
7. Stock piles of soil and other erodible materials shall be stabilized or protected with sediment trapping measures. The contractor is responsible for the temporary protection and permanent stabilization for stockpiles on site as well as for materials transported from the project site.
8. The contractor shall monitor and take precautions to control dust including (but not limited to) use of water, mulch, or chemical dust adhesives and control of construction site traffic.
9. Effluent from de-watering operations shall be filtered or passed through an approved sediment trapping device, or both, and discharged in a manner that does not adversely affect adjacent properties, wetlands, waterways or the storm drainage system.
10. The contractor is responsible for installation and maintenance of any additional control measures necessary to prevent erosion and sedimentation as determined necessary by the plan approving authority.
11. Temporary erosion and sediment control measures are not to be removed until all disturbed areas are stabilized. After stabilization is complete, all measures shall be removed within 30 days. Trapped sediment shall be spread and seeded.

ENGINEERING CONCEPTS, INC.
20 S. ROANOKE ST., PO BOX 619
FINCASTLE, VIRGINIA 24090
540.473.1253 FAX: 540.473.1254

| | | |
|---|---|---|
| Drawn MSMj | 4000 MAYFLOWER AVENUE SURVEY SHEET | SCALE: NONE |
| Designed ECI | | DATE: MAR 23, 2015 |
| Checked JSC | FLOOD MITIGATION CITY OF NORFOLK VIRGINIA | PROJECT: 14141 |
| Approved JSC | | 2 |

THE CITY OF NORFOLK

# FLOOD MITIGATION PROJECT

01010 _ SUMMARY OF WORK

PART 1 _ GENERAL

1.1 SUMMARY

Section Includes:

1. Project description.
2. Definitions
3. Regulatory requirements.
4. Access to the site and use of the premises.
5. Preconstruction meeting.
6. Security procedures.
7. Coordination.
8. Controls

1.2 PROJECT DESCRIPTION

A. The Public Body is: The City of Norfolk, 810 Union Street, Norfolk VA, 23510.

B. The Construction Manager is: Engineering Concepts, Inc., 20 South Roanoke Street, Fincastle Virginia, 24090

The work consists of:

1. Turn-key elevation of the house, including all necessary site work, grading, foundation and footer installation and modifications, access and egress modifications, and utility extensions. All work to be performed to meet all applicable city and state building codes and in accordance with State and Federal Program regulations. The Contractor will be responsible for obtaining permits in accordance to the policies and requirements of the city. General Contractor shall have a minimum of 5 years experience with the elevation of homes and have elevated at least 5 homes in the past 5 years. The work includes, but is not limited to:

a) Elevation

1. Elevate existing structure, including additions to home, enclosed porches, chimneys and porch roof, but excluding all detached structures.
2. Provide new pressure treated, minimum 0.4 CCA ground contact sill plate for entire structure.
3. Extend downspouts to grade and provide pre-cast concrete splash blocks.
4. Structure shall be vacant during all construction activity that involves the elevation of the home.
5. Any interior floors, including existing concrete slabs that are damaged beyond repair as a result of this work shall be replaced with wooden floor joists and plywood flooring with a vinyl covering, as required by code.
6. Remove and dispose offsite at a legal landfill all debris generated from this work from the yard, landscaped areas, or any other portions of the property.
7. The concrete slabs may be elevated or replaced with a wooden floor built to current code requirements.
8. Any construction material located below the Design Flood Elevation (Base Flood Elevation + 3.0' of Freeboard) shall be flood resistant materials as defined by FEMA TB-2.

b) Foundation

1. Install new construction, masonry wall foundations, (see structural drawings) chimney supports, and interior masonry piers up to new structure elevation. Provide termite shields on new foundation walls. (see structural drawings) Provide new interior 8" CMU pilasters with reinforced concrete footings where necessary.
2. Reinforcing dowels shall be placed in all continuous perimeter 8" CMU masonry foundation walls. The minimum reinforcing shall be #5 bars spaced per applicable codes. All hollow masonry cells that will contain the reinforcing shall be filled with pea gravel concrete from footer to sill plate (see drawings for details).
3. Install galvanized horizontal joint reinforcing between block runs in mortar joints through total run of block. Reinforcing should be installed in every other course.
4. Home shall be properly secured to foundation; per applicable city and state codes.
5. Houses with a brick exterior shall be elevated with brick only if it is the most cost effective for the exterior of the house. Contractor shall provide 12" CMU to support brick. Otherwise brick shall be removed and disposed of properly and builder grade vinyl siding, along with vented soffit shall be installed. Color to be selected by home owner.

c) Vents

1. Provide foundation vents and flood vents as required by code. Flood vents shall be Engineer Certified Smart Vent or an approved equal submitted for review prior to the bid due date. From FEMA Technical Bulletin 1, 2008, "Non-engineered openings are used to meet the NFIP's prescriptive requirement of 1 square inch of net open area for every square foot of enclosed area. As an alternative, engineered openings that have characteristics that differ from non-engineered openings may be used provided they are designed and certified by a registered design professional as meeting certain performance characteristics described in this Technical Bulletin". All flood vents shall be located within 12 inches of the adjacent grade spread equally on all walls. Air vents shall be placed on all exterior walls per code requirements. Install vents that cannot be closed by human intervention. The vents are to be permanently opened with bug screens. Provide one new crawl space access door per crawl space area. Provide steel or masonry lintels at all masonry openings greater than 8" X 16". Vent doors that release shall be anchored inside of the foundation. Engineered Vents shall be Smart Vent providing 200 square feet of crawl space per vent, or approved equal.
2. Crawl space area is defined by FEMA as to the exterior of the walls.

d) Decks, Porches, Stoops Etc.

1. All existing wooden decks, stoops, porches, etc. shall remain and be elevated unless required to be removed for new construction or code issues. Coordinate the removal of existing concrete porches with the homeowner.
2. When new landings, stairs, and railings are provided at entrances, the dimensions of the new porch shall be 6 feet wide by 6 feet long. Provide stair rise and run required by code and site conditions. Provide stairs that meet all applicable codes. Where existing concrete sidewalks exist at the front porch, the new concrete landings at base of stairs shall tie into the existing sidewalk. Contractor shall coordinate the placement direction of the new stairs with the property owner prior to constructing the new stairs.
3. Provide ground access to wood porches, stairs, and railings.
4. All construction shall stay within the property setback limits and meet all applicable code requirements.
5. Platforms and stairs shall be constructed per the City of Norfolk's Deck Handout.

e) Site

1. All sidewalks and driveways shall remain intact and undamaged as a result of this construction. Any damaged sidewalk(s) or driveways shall be replaced with like materials to pre-construction dimensions at contractor's expense.
2. Any fencing that is removed for construction will need to be placed back in the same condition as before construction.
3. All landscaping shall remain as it currently exists unless required to be removed for new construction. Coordinate removal of landscaping with Homeowner prior to removal. The property shall be restored to pre-existing conditions in regards to the contractor replanting any vegetation the contractor / homeowner moved prior to construction. The complete replanting of flower beds, etc. is the responsibility of the homeowner.
4. Permanent seeding shall be applied to all disturbed areas in accordance with the Virginia Erosion and Sediment Control Handbook, Latest Edition.
5. Right of Way Permit and proper fees to the City and VDOT for the placement and usage of a trash receptacle in the street.

f) Crawl Space General Requirements

1. Insulation at underside of floor is required per code. If it is damaged as a result of work performed on this project it must be replaced at the contractor's expense. If no insulation exists in an existing crawl space, the homeowner will be responsible for furnishing. Floor insulation shall have a minimum value of R19.
2. Provide lighting in crawl spaces as per code requirements.
3. Contractor shall provide sand/fill dirt under the house to the same elevation as the ground on the outside of the house.
4. Contractor shall install moisture barrier under the house per applicable codes.
5. Brick exteriors shall be elevated if proven most economical. The contractor shall inform the homeowner in the case that the brick is not able to be elevated. Brick that is not elevated shall be replaced with builder grade vinyl siding as part of the project. This shall be addressed at the time of the third party agreement.
6. Existing chimneys shall be elevated with the house, if this is the most economical solution.
7. When a garage is present and elevated the infill above the garage door shall be wood construction with a vinyl siding exterior. The infill area will require building department inspection.

g) Slab General Requirements

1. Insulation at underside of floor is required per code. For slab areas, the contractor is responsible for insulating the bottom of the elevated structure with insulation meeting state and local requirements. Floor insulation shall have a minimum value of R19.
2. All new floor coverings shall be vinyl.
3. Kitchen Cabinets shall be removed by the contractor and stored at the homeowner's expense. The cabinets shall be reinstalled per the contract. The contractor shall ensure the cabinets are not damaged during demolition. In the case that the cabinets are not able to be re-used then economy grade materials.
4. Tubs, toilets, showers, shall be removed by the contractor and stored at the homeowner's expense. These items shall be reinstalled by the contractor. The contractor will need to ensure that they are not damaged. The contractor shall be responsible for damage to the toilets, tubs, showers, and wall finishes cabinets. Damaged showers and tubs will be allowed to be replaced with fiberglass. Existing toilets shall be installed with new wax ring.
5. Damage to the existing walls shall be repaired with sheet rock, finished, sanded, and primed white. Decorative painting or wall finishes shall be the homeowner's responsibility.
6. Base trim and door trim replacement shall be the responsibility of the contractor. Replacement shall be builder grade materials
7. Contractor shall adjust existing doors for proper function.
8. Brick exteriors shall be elevated if proven most economical. The contractor shall inform the homeowner in the case that the brick is not able to be elevated. Brick that is not elevated shall be replaced with builder grade vinyl siding as part of the project. This shall be addressed at the time of the third party agreement.
9. When most economical existing chimneys shall be elevated with the house.
10. When a garage is present and elevated the infill above the garage door shall be wood construction with a vinyl siding exterior. The infill area will require building department inspection.

g) Utilities

1. Extend all utilities (water, sewer, cable, phone, gas etc.) with the house. Electric meter base shall be located as per applicable codes and coordinated with utility company. Contractor coordinates disconnection and re-connection with utility companies. Contractor pays all utility fees associated.
2. Raise all heat pumps/HVAC units (including exterior units) so that the bottom of the unit is at the same elevation as the new finished floor. Provide pressure treated (0.40 CCA) wood platform and posts to support the units where necessary.
3. If HVAC ductwork or other qualifying utilities (electrical, plumbing) are found to be below the Base Flood Elevation then contractor shall elevate structure so that ductwork is at or above the Design Flood Elevation. Contractor shall replace any and all damaged HVAC ductwork that is damaged as a result of this construction at his/her expense.
4. If oil heat is the primary source of heat and if oil supply to the furnace is determined to be inadequate as a result of the new house elevation, then the Contractor shall provide a pump per manufacturer's recommendations to ensure proper flow of heating oil to the furnace. Contractor shall ensure that the heating and cooling systems perform to their pre-construction conditions at the completion of the work.
5. If an oil pump cannot be used to supply oil to the heating source, then the oil tanks shall be raised either by constructing a concrete foundation and 8" CMU pier walls, with a saddle shape to the same height the house is being raised, or by constructing a metal stand painted the same color as the foundation that meets code requirements, for the tank to sit on. If the tanks are elevated for a gravity system then an access platform with stairs to the oil tank shall be constructed of pressure treated lumber (0.40 CCA) according to applicable building code requirements. Contractor shall coordinate direction and location of this access platform with homeowner.
6. All existing oil tanks shall be properly fastened/anchored to the existing supporting stands and the ground.
7. Provide insulation on all exposed water lines, even if there was no insulation before. Insulation shall have a minimum R valve of 20.
8. Repair of pre-existing conditions above the sill plate; unless specifically indicated is not part of this project's scope. For example rotten floor joists, utility problems, existing cracks in walls, etc. The contractor shall document and bring these potential problems to the homeowner's attention for correction by the homeowner.

Additional House requirements

**a) 4000 Mayflower Avenue**

1. Contractor shall notify Construction Manager once the house has been elevated. Foundation drawings may require some modification after house is elevated as access to the crawl space is limited and minor adjustments to these drawings may be necessary to accommodate actual conditions. Drawings will be provided once the house has been raised.
2. This house is on a crawl space.
3. Contractor shall provide 6'x6' wood landings built at each of the exterior doors, with steps to grade. Built per the deck construction guidelines attached.
4. All construction activities must comply with CBPA requirements.
5. The limits of disturbance is anticipated to be 2,600 S.F.

1.3 DEFINITIONS

A. Furnish: To supply products to the project site, including delivering, unloading and replacing damaged and rejected products.

B. Install: To put products in place in the work ready for the intended use, including unloading, unpacking, handling, storing, assembling, installing, erecting, placing, applying, anchoring, working, finishing, curing, protecting, cleaning, and similar operations.

C. Provide: To furnish and install products.

D. Indicated: Shown, noted, scheduled, specified, or drawn, somewhere in the contract documents.

E. Required: Necessary to satisfy the provisions of the contract documents and/or applicable regulations.

1.4 REGULATORY REQUIREMENTS

A. All work will be performed in accordance with the governing regulations. The following regulations are applicable to this project:

1. The International Building Code Current Edition.
2. The Virginia Department of Transportation Road and Bridge Specifications, Current Addition.
3. The Virginia Department of Transportation Road and Bridge Standards, Volumes I & II, Current Addition.
4. Virginia Department of Health Waterworks Regulations, Current Addition.
5. Virginia Department of Health Sewage Collection and Treatment Regulations, Current Addition.
6. Virginia Department of Health Sewage Handling and Disposal Regulations, Current Addition.
7. Virginia Erosion and Sediment Control Handbook, Current Addition.
8. CABO One and Two Family Dwelling Code, Current Addition.
9. Right of Way Permit and proper fees to the City and VDOT for the placement and usage of a trash receptacle in the street.
10. FEMA regulations
11. City of Norfolk ordinances and codes

B. Other regulations may also be applicable.

A. Submit a copy of all permits, licenses, and similar permissions obtained, and receipts for fees paid, to the Construction Manager.

B. Prior to reoccupancy, the elevated home shall be suitable for occupancy as determined by the City of Norfolk Building Official. The Contractor shall provide the Construction Manager with a copy of the occupation permit issued by City official's final inspection.

1.5 ACCESS TO THE SITE AND USE OF THE PREMISES

A. The space available to the Contractor for the performance of the work, either exclusively or in conjunction with others performing other construction as part of the project, is limited to the existing property on which the house is located and the proposed relocation property (where applicable). Other areas are off limits to all construction personnel, including vehicular access and parking.

PART 3 _ EXECUTION

3.1 PRECONSTRUCTION MEETING

A. A preconstruction meeting will be held at a time and place designated by the Construction Manager, for the purpose of identifying responsibilities of the Public Body's and the Construction Manager's personnel and explanation of administrative procedures.

B. The Contractor shall discuss the following items at this meeting:

1. Construction schedule.
2. Use of areas of the site.
3. Delivery and storage.
4. Safety.
5. Security.
6. Cleaning up.
7. Subcontractor procedures.
8. Submittals.
9. Change orders.
10. Applications for payment.
11. Record documents.
12. Inspection and Testing.

C. Attendees shall include representatives of:

1. The Public Body.
2. The City employees associated with the project
3. The Construction Manager and any consultants.
4. The Contractor and its superintendent.
5. Major subcontractors, suppliers, and fabricators.
6. Others interested in the work.

3.2 COORDINATION

A. Coordination of related activities of the City of Norfolk and the Construction Manager is the responsibility of the contractor.

B. Contractor shall coordinate with the City of Norfolk, and utility companies concerning the installation and the payment for relocation of overhead, underground utility (electric, cable, gas

C. Any "side deals" requested by the owner to the contractor for additional services shall be paid for by the owner and shall not increase the timeline of the project.

3.3 CONTROLS

A. The Contractor will be responsible for establishing field controls for construction purposes.

END OF SECTION 01010

ENGINEERING CONCEPTS, INC.
20 S. ROANOKE ST., PO BOX 619
FINCASTLE, VIRGINIA 24090
540.473.1253 FAX: 540.473.1254

| | | |
|---|---|---|
| Drawn | 4000 MAYFLOWER AVENUE GENERAL NOTES | SCALE: NONE |
| Designed ECI | | DATE: MAR 23, 2015 |
| Checked JSC | FLOOD MITIGATION CITY OF NORFOLK VIRGINIA | PROJECT: 14141 |
| Approved JSC | | 3 |

THE CITY OF NORFOLK

# FLOOD MITIGATION PROJECT

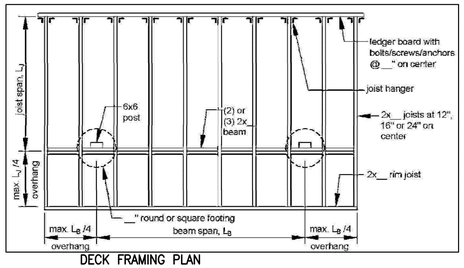


DECK FRAMING PLAN

*GUARD REQUIREMENTS:*
*All decks greater than 30" above grade measured vertically to grade below at any point within 36"horizontally to the edge of the open side are required to have a guard. If you are providing a guard when one is not required, it must meet these requirements.*

**TABLE 1: MAXIMUM JOIST SPANS**

| Joist Size | Joist Spacing, on center | Joist Span[1] excludes overhangs |
|---|---|---|
| 2x6 | 16" | 9'-4"(No overhangs) |
| 2x6 | 24" | 7'-10"(No overhangs) |
| 2x8 | 16" | 12'-5" |
| 2x8 | 24" | 10'-2" |
| 2x10 | 16" | 15'-10" |
| 2x10 | 24" | 13'-1" |
| 2x12 | 16" | 18'-0" |
| 2x12 | 24" | 15'-0" |

[1] Spans based on 40 PSF live load, 10 PSF dead load, southern pine#2, normal loading duration, wet service conditions and deflection: $\Delta$=L/360.

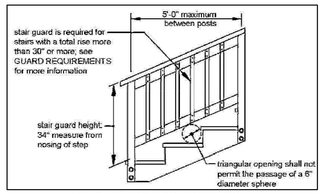


STAIR GUARD REQUIREMENTS

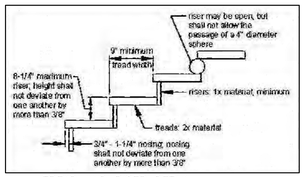


TREAD AND RISER DETAIL

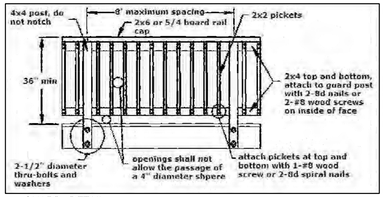


GUARD DETAIL

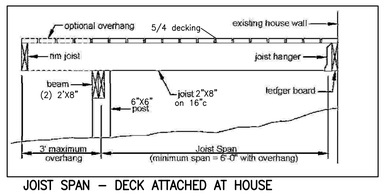


JOIST SPAN – DECK ATTACHED AT HOUSE

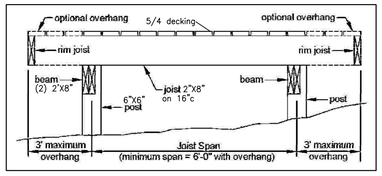


JOIST SPAN – FREE STANDING

NOTES:

1. *Deck details for 6'x6' deck as approved by funding. Alterations to size shall require additional design by professional engineer.*
2. *All work shall be performed and materials installed in accordance with the current editions of the following codes as adopted by the local governing authorities. Nothing in these plans is to be construed to permit work not conforming to these codes:*

   *2012 Virginia Uniform Statewide Building Code; 2012 International Building Code; 2012 International Mechanical Code; ANSI/EIA-222-G Life Safety Code; 2012 International Residential Code; City and/or County Ordinances; 2012 International Plumbing Code; NFPA 70 2008; 2012 International Fuel Gas Code; Local Building Code(s).*
3. *Stair rise shall be 6 3/4" – 8" evenly spaced for the deck height.*
4. *Tread width shall be approximately 11".*
5. *Footings and landings shall be per the 2012 Virginia Construction Code, Figure R507.8.1.*

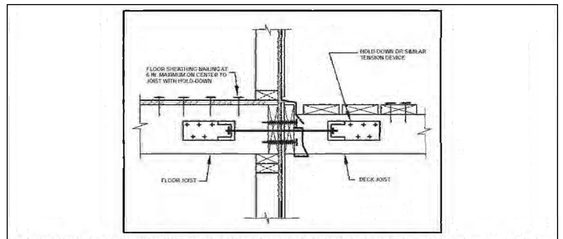


**FIGURE 12: ATTACHMENT OF LEDGER BOARD-TO-BAND BOARD with hold down tension devices**

***Note: 2 hold downs are required per deck and must have an allowable stress design capacity of not less than 1500 lbs. per device. If hold downs can not be installed the deck must be freestanding.

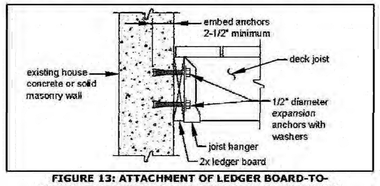


**FIGURE 13: ATTACHMENT OF LEDGER BOARD-TO-FOUNDATION WALL (CONCRETE OR SOLID MASONRY)**

**LEDGER ATTACHMENT REQUIREMENTS**

**GENERAL**: Attach the ledger board, which shall be a minimum 2x8 ledger board, to the existing exterior wall in accordance with **FIGURE 12** through **FIGURE 14**. When attachments are made to the existing house band board, the band board shall be capable of supporting the new deck. If this cannot be verified or conditions at the existing house differ from the details herein, then a free-standing deck is required. See FREE-STANDING DECKS on Sheet 12.

**YOU MUST VERIFY THE EXISTING CONDITIONS IN THE FIELD PRIOR TO APPLYING FOR A BUILDING PERMIT. COMPLIANCE WITH ALL THE REQUIREMENTS HEREIN IS CRITICAL TO ENSURE THE STRUCTURAL STABILITY OF YOUR DECK AND THE SAFETY OF YOU AND YOUR FAMILY.**

**SIDING AND FLASHING**: House siding, or the exterior finish system, must be removed prior to the installation of the ledger board. Flashing is required at any ledger board connection to a wall of wood framed construction and shall be composed of copper (attached using copper nails), stainless steel, UV resistant plastic or galvanized steel coated with 1.85 oz/sf of zinc (G-185 coating). See **FIGURE 12** for continuous flashing with drip edge.

**FIGURE 11: MWJ PROFILE**

**MANUFACTURED WOOD JOIST:** The term "MWJ" denotes manufactured wood "I" joists; see FIGURE 11. Examples of manufactured wood joists are TJI, GPI, and LPI.
Many new homes constructed with MWJs include a 1-$^{1}/_{4}$" manufactured solid band board that can support the attachment of a deck; see **FIGURE 12**. However, older homes constructed with MWJs may only include a plywood band board which cannot support a deck. In such cases a free-standing deck or a full plan submission is required.

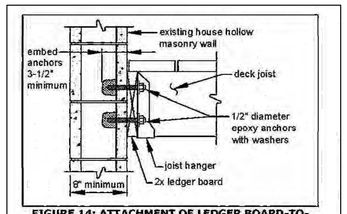


**FIGURE 14: ATTACHMENT OF LEDGER BOARD-TO-FOUNDATION WALL (HOLLOW MASONRY)**

*Lag Screws*
Lag screws shall have a minimum diameter of $^{1}/_{2}$" and shall be hot-dipped galvanized or stainless steel. Lag screws may be used only when the field conditions match those shown in **FIGURE 12**. **You must verify the existing conditions in the field prior to applying for a building permit and installing lag screws. Compliance with all the requirements herein is critical to ensure the structural stability of your deck.** See **FIGURE 19** for lag screw length and shank requirements. All lag screws shall be installed with washers.

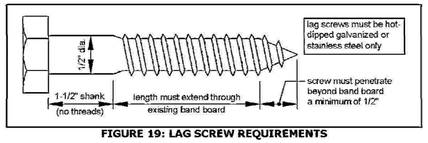


**FIGURE 19: LAG SCREW REQUIREMENTS**

**Lag screw installation requirements:** *Each lag screw shall have pilot holes drilled as follows: 1) Drill a $^{1}/_{2}$" diameter hole in the ledger board, 2) Drill a $^{5}/_{16}$" diameter hole into the solid connection material of the existing house.* DO NOT DRILL A $^{5}/_{2}$" DIAMETER HOLE INTO THE SOLID CONNECTION MATERIAL.

The threaded portion of the lag screw shall be inserted into the pilot hole by turning. DO NOT DRIVE WITH A HAMMER. Use soap or a wood-compatible lubricant as required to facilitate tightening. Each lag screw shall be thoroughly tightened.

*Thru-Bolts*
Thru-bolts shall have a minimum diameter of $^{1}/_{2}$". Pilot holes for thru-bolts shall be $^{17}/_{32}$" to $^{9}/_{16}$" in diameter. Thru-bolts must be equipped with washers at the bolt head and nut.

**TABLE 3: FOOTING SIZE**

| Beam Span, $L_B$ | Joist Span, $L_J$ | Footing Size Square | Footing Size Round | Minimum Thickness[a] |
|---|---|---|---|---|
| 0 – 8'-0" | 0 - 10'-0" | 16" | 18" | 8" |
| | 10'-1" - 14'-0" | 16" | 18" | 8" |
| | 14'-1" - 18'-0" | 18" | 20" | 10" |
| 8'-1" – 12'-0" | 0 - 10'-0" | 16" | 18" | 8" |
| | 10'-1" - 14'-0" | 22" | 24" | 10" |
| | 14'-1" - 18'-0" | 22" | 24" | 10" |
| 12'-1" – 17'-5" | 0 - 10'-0" | 22" | 24" | 10" |
| | 10'-1" - 14'-0" | 24" | 26" | 12" |

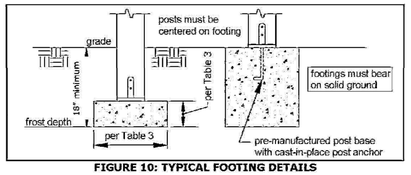


**FIGURE 10: TYPICAL FOOTING DETAILS**


ENGINEERING CONCEPTS, INC.
20 S. ROANOKE ST., PO BOX 619
FINCASTLE, VIRGINIA 24090
540.473.1253 FAX: 540.473.1254


| | | |
|---|---|---|
| Drawn MSMj | 4000 MAYFLOWER AVENUE DECK DETAILS | SCALE: NONE |
| Designed ECI | | DATE: SEPT. 1, 20115 |
| Checked JSC | FLOOD MITIGATION CITY OF NORFOLK VIRGINIA | PROJECT: 13005 |
| Approved JSC | | 4 |

## GENERAL STRUCTURAL NOTES:

1. COORDINATE AND VERIFY ALL DIMENSIONAL INFORMATION INDICATED. THE CONTRACTOR SHALL VERIFY ALL CONDITIONS AND DIMENSIONS PERTAINING TO EXISTING UTILITIES AND CONSTRUCTION BEFORE PROCEEDING WITH THE WORK.
2. THE CONTRACTOR SHALL BE RESPONSIBLE FOR ALL CONSTRUCTION MEANS, METHODS, SEQUENCES, REGULATIONS, AND SAFETY MEASURES AS IT RELATES TO THIS PROJECT.
3. PROVIDE ALL TEMPORARY SHORING AND BRACING REQUIRED TO ERECT AND HOLD THE STRUCTURE IN PROPER ALIGNMENT UNTIL ALL STRUCTURAL WORK AND CONNECTIONS HAVE BEEN COMPLETED. THE ENGINEER SHALL NOT BE RESPONSIBLE FOR THE DESIGN, SEQUENCES, OR PROCEDURES TO PERFORM THIS WORK.
4. UNDER NO CIRCUMSTANCES SHALL THE CONTRACT DRAWINGS BE REPRODUCED, IN PART OR IN WHOLE, TO BE USED AS SHOP DRAWINGS WITHOUT WRITTEN APPROVAL FROM THE ARCHITECT/ENGINEER.

## DESIGN CRITERIA AND GOVERNING CODES:

1. 2012 EDITION OF THE INTERNATIONAL RESIDENTIAL CODE (IRC).
2. 2010 EDITION OF THE AMERICAN SOCIETY OF CIVIL ENGINEERS/STRUCTURAL ENGINEERS INSTITUTE (ASCE/SEI) 7–10, "MINIMUM DESIGN LOADS FOR BUILDINGS AND OTHER STRUCTURES".
3. 2011 EDITION OF THE AMERICAN CONCRETE INSTITUTE (ACI): ACI 318–11, "BUILDING CODE REQUIREMENTS FOR STRUCTURAL CONCRETE".
4. 2011 EDITION OF THE AMERICAN CONCRETE INSTITUTE (ACI): ACI 510–11, "BUILDING CODE REQUIREMENTS FOR MASONRY STRUCTURES" AND ACI 510.1–11, "SPECIFICATIONS FOR MASONRY STRUCTURES".
5. 2010 EDITION OF THE AMERICAN INSTITUTE OF STEEL CONSTRUCTION (AISC): AISC 360–10, "SPECIFICATION FOR STRUCTURAL STEEL BUILDINGS".
6. 2012 EDITION OF THE AMERICAN WOOD COUNCIL: ANSI/AWC NDS–2012 NATIONAL DESIGN SPECIFICATION (NDS) FOR WOOD CONSTRUCTION.

## DESIGN LOADS:

THE FOLLOWING LOADS IN ADDITION TO THE DEAD LOADS OF THE PERMANENT CONSTRUCTION BUILDING MATERIALS WERE USED:

LIVE LOAD(S):
LIVING AREAS : 40 PSF
SLEEPING AREAS : 30 PSF
ATTIC SPACE : 20 PSF

ROOF LIVE LOAD:
MINIMUM ROOF LOAD : 20 PSF

ROOF SNOW LOAD DATA:
GROUND SNOW LOAD, Pg : 12 PSF
SNOW EXPOSURE FACTOR, Ce : 1.0 (PARTIALLY EXPOSED)
SNOW LOAD IMPORTANCE FACTOR, Is : 1.0
THERMAL FACTOR, Ct : 1.0 (HEATED)

WIND DESIGN DATA:
ULTIMATE DESIGN WIND SPEED, Vult (3 SECOND GUST) : 100 MPH
RISK CATEGORY : II
WIND EXPOSURE : B

## FOUNDATION NOTES:

1. THE FOUNDATIONS WERE DESIGNED FOR A MAXIMUM ALLOWABLE NET SOIL BEARING PRESSURE OF 2,000 PSF PER THE GEOTECHNICAL REPORT BY GET SOLUTIONS DATED DECEMBER 11, 2015. THE SOILS BENEATH THE PROPOSED FOOTINGS SHALL BE CAPABLE OF SAFELY SUPPORTING THIS LOAD WITHOUT EXCESSIVE SETTLEMENT. ANY UNUSUAL SOIL CONDITIONS SHALL BE BROUGHT TO THE ATTENTION OF THE ARCHITECT/ENGINEER.
2. ELEVATIONS TO TOP OF ALL FOOTINGS ARE INDICATED ON THE FOUNDATION PLAN. FOOTINGS SHALL BE LOWERED, IF APPROVED BY THE ARCHITECT/ENGINEER, TO OBTAIN THE DESIGN BEARING PRESSURE. CONTRACTOR SHALL REVIEW THE GEOTECHNICAL REPORT (IF APPLICABLE) PRIOR TO STARTING FOUNDATION CONSTRUCTION.
3. EARTH FORMED FOOTINGS SHALL CONFORM TO THE SHAPE, LINES, AND DIMENSIONS AS SHOWN ON THE FOUNDATION PLAN. BEFORE PLACING CONCRETE, ALL EMBEDDED ITEMS SHALL BE PROPERLY PLACED, ACCURATELY POSITIONED, AND MAINTAINED SECURELY IN PLACE.
4. THE CONTRACTOR SHALL TAKE ALL PRECAUTIONS NECESSARY TO PREVENT WATER FROM ENTERING FOUNDATION EXCAVATIONS. ALL WATER SHALL BE REMOVED PRIOR TO PLACING CONCRETE. CONCRETE SHALL NOT BE PLACED ON SOFT, SATURATED SOIL.
5. WALL FOOTINGS SHALL BE CENTERED ON THE WALLS AND COLUMN FOOTINGS SHALL BE CENTERED ON THE COLUMNS, UNLESS OTHERWISE NOTED.
6. PIPES SHALL NOT RUN THROUGH FOOTINGS. STEP FOOTINGS AS REQUIRED FOR UTILITIES TO RUN ABOVE TOP OF FOOTINGS.

## CAST–IN–PLACE CONCRETE NOTES:

1. ALL CAST–IN–PLACE CONCRETE SHALL BE NORMAL WEIGHT CONCRETE AND ATTAIN A MINIMUM 28 DAY COMPRESSIVE STRENGTHS (f'c) OF 3,500 PSI.
2. REINFORCING MATERIALS SHALL BE ASTM A 615, GRADE 60, DEFORMED
3. THE SLUMP OF CAST–IN–PLACE CONCRETE SHALL NOT EXCEED 4 INCHES WITHOUT A HIGH RANGE WATER REDUCING ADMIXTURE. THE SLUMP OF CAST–IN–PLACE CONCRETE WITH THE USE OF A HIGH RANGE WATER REDUCING ADMIXTURE SHALL NOT EXCEED 8 INCHES. ALL CONCRETE EXPOSED TO WEATHER SHALL BE AIR–ENTRAINED 5% TO 7%. ENTRAPPED AIR SHALL NOT EXCEED 3%.
4. ALL REINFORCING STEEL AND EMBEDDED ITEMS SUCH AS ANCHOR BOLTS AND WELD PLATES SHALL BE ACCURATELY PLACED AND HELD SECURELY O PREVENT DISPLACEMENT DURING THE CONCRETE PLACEMENT. DO NOT WET SET DOWELS, ANCHOR BOLTS, OR OTHER EMBEDDED ITEMS. ALL REINFORCEMENT SHALL BE SUPPORTED ON PLASTIC–PROTECTED WIRE BAR SUPPORTS OR PRECAST CONCRETE BAR SUPPORTS OF GREATER COMPRESSIVE STRENGTH THAN THE CONCRETE, MANUFACTURED IN ACCORDANCE WITH THE CONCRETE REINFORCING STEEL INSTITUTE (CRSI) MANUAL OF STANDARD PRACTICE.
5. MINIMUM CONCRETE COVER FOR PROTECTION OF REINFORCEMENT SHALL BE AS FOLLOWS, UNLESS THE DRAWINGS DEPICT GREATER COVER REQUIREMENTS:

   CONCRETE CAST AGAINST AND PERMANENTLY EXPOSED TO EARTH : 3 INCHES

   CONCRETE CAST AGAINST FORMWORK AND PERMANENTLY EXPOSED TO EARTH OR WEATHER : 1 1/2 INCHES

   CONCRETE CAST AGAINST FORMWORK AND NOT EXPOSED TO WEATHER OR IN CONTACT WITH EARTH : 3/4 INCH
6. THE CONTRACTOR SHALL SUBMIT SHOP DRAWINGS, CONCRETE MIX DESIGNS AND TEST REPORTS. THE MIX DESIGN SHALL INCLUDE ALL PROPERTIES OF THE MIX, MATERIALS USED IN THE CONCRETE, AND CONCRETE STRENGTH TESTS. SHOP DRAWINGS FOR CONCRETE REINFORCEMENT SHALL INCLUDE REINFORCING AND WELDED WIRE REINFORCEMENT.
7. WHERE NEW CONCRETE IS PLACED AGAINST EXISTING, INCLUDING RECENTLY PLACED CONCRETE WHICH IS NO LONGER PLASTIC, COAT THE EXISTING CONCRETE SURFACE ABUTTING NEW WITH AN EPOXY BONDING COMPOUND..

## MASONRY NOTES:

1. CONCRETE MASONRY UNITS SHALL HAVE A MINIMUM 28–DAY COMPRESSIVE STRENGTGH (F'm) OF 1,500 PSI AND BE IN ACCORDANCE TO THE FOLLOWING:

   A. CONCRETE MASONRY UNITS – ASTM C90, LIGHTWEIGHT
   B. MORTAR – ASTM C270, TYPE M OR S MASONRY CEMENT
   C. GROUT – ASTM C476, (F'G) – 3,000 PSI (MIN) AND 5,000 PSI (MAX.)
   D. REINFORCING BARS – ASTM A615, GRADE 60 DEFORMED BARS
2. ALL MORTAR FOR USE IN MASONRY BEARING WALLS SHALL BE IN ACCORDANCE WITH ASTM C–270 TYPE "S" MORTAR. USE TYPE "M" MORTAR FOR BELOW GRADE MASONRY. GROUT ALL CELLS SOLID BELOW FINISHED FIRST FLOOR UNLESS OTHERWISE NOTED.
3. PROVIDE FOUNDATION DOWELS FOR ALL REINFORCED MASONRY WALLS WITH STANDARD ACI HOOK. LAP 48 BAR DIAMETERS WITH VERTICAL MASONRY REINFORCING, NUMBER, SIZE AND SPACING OF DOWELS SHALL MATCH WALL REINFORCING. DOWELS SHALL BE WIRE TIED AND NOT SET INTO WET CONCRETE.
4. ALL REINFORCING STEEL MARKED CONTINUOUS (CONT.) SHALL BE LAPPED 48 BAR DIAMETERS AT SPLICES, UNLESS OTHERWISE NOTED. FULLY GROUT ALL REINFORCED CELLS, BOND BEAMS AND LINTELS.
5. THE MASONRY CONTRACTOR SHALL BUILD, REINFORCE, AND GROUT THE WALLS IN NO GREATER THAN 5'–4" LIFTS, VIBRATING GROUT IMMEDIATELY AFTER EACH LIFT.
6. LAP ALL REINFORCING AS FOLLOWS:

| | | |
|---|---|---|
| #3 – 12" | #6 – 53" | #9 – 81" |
| #4 – 18" | #7 – 63" | |
| #5 – 28" | #8 – 72" | |

7. HORIZONTAL JOINTS SHALL BE REINFORCING WITH GALVANIZED STANDARD NO. 9 GAGE LADDER TYPE AT 16" O/C ON ALL WALLS, LAP MINIMUM OF 6 INCHES.
8. DIMENSIONS SHOWN FOR CMU WALLS ARE NOMINAL BLOCK. HOLD DIMENSIONS TO OUTSIDE FACE OF CMU.
9. VERTICAL REINFORCEMENT SHALL BE HELD IN POSITION AT TOP AND BOTTOM AND AT INTERVALS NOT EXCEEDING 192 BAR DIAMETERS OF THE REINFORCEMENT.

## STRUCTURAL STEEL NOTES:

1. ALL STRUCTURAL STEEL SHALL BE IN ACCORDANCE WITH THE FOLLOWING SPECIFICATIONS:
   A. W–SHAPES – ASTM A992 GRADE 50
   B. MISCELLANEOUS SHAPES, ANGLES, PLATES AND BARS – ASTM A36
   C. ANCHOR RODS – ASTM F1554, GRADE 36
2. DESIGN, FABRICATION, ERECTION, AND ALL OTHER STRUCTURAL STEEL WORK SHALL CONFORM TO THE FOURTEENTH EDITION OF THE MANUAL OF STEEL CONSTRUCTION OF THE AMERICAN INSTITUTE OF STEEL CONSTRUCTION.
3. ALL HOLES AND CUTS REQUIRED IN STRUCTURAL STEEL MEMBERS SHALL BE SHOWN ON THE SHOP DRAWINGS AND SHALL BE MADE IN THE SHOP. NO HOLES SHALL BE CUT IN THE FIELD WITHOUT THE APPROVAL OF THE ENGINEER. TORCH CUTTING IS NOT PERMITTED.
4. ALL STRUCTURAL STEEL, EXCEPT MEMBERS INDICATED TO BE GALVANIZED, SHALL BE SHOP PRIMED AND EPOXY TOP COAT.

## WOOD FRAMING NOTES:

1. ALL STRUCTURAL LUMBER SHALL BE IN ACCORDANCE WITH S.P.I.B. SPECIFICATIONS AND SHALL BE No. 2 SOUTHERN YELLOW PINE AND USED AT 15% MAXIMUM MOISTURE CONTENT OR EQUAL.
2. ALL WOOD FRAMING MEMBERS WITHIN CRAWL SPACE AND SILL PLATES AROUND THE BUILDING PERIMETER SHALL BE PRESERVATIVE TREATED.

## ABBREVIATIONS

| | | | |
|---|---|---|---|
| ACI | AMERICAN CONCRETE INSTITUTE | GA. | GAGE |
| ADDIT. | ADDITIONAL | GALV. | GALVANIZED |
| AISC | AMERICAN INSTITUTE OF STEEL CONSTRUCTION | HORIZ. | HORIZONTAL |
| | | INFO. | INFORMATION |
| ARCH. | ARCHITECTURAL | KSI | KIPS PER SQUARE INCH |
| ASTM | AMERICAN STANDARD FOR TESTING OF MATERIALS | LLH | LONG LEG HORIZONTAL |
| | | LLV | LONG LEG VERTICAL |
| AWS | AMERICAN WELDING SOCIETY | LT. | LIGHT |
| BLDG. | BUILDING | L.W. | LONG WAY |
| B.O. | BOTTOM OF | MANUF. | MANUFACTURER |
| BOTT. | BOTTOM | MAS. | MASONRY |
| BRG. | BEARING | MAX. | MAXIMUM |
| CL | CENTERLINE | MIN. | MINIMUM |
| CLR. | CLEAR | MECH. | MECHANICAL |
| CMU | CONCRETE MASONRY UNIT | MTL. | METAL |
| COL. | COLUMN | o/c | ON CENTER |
| CONC. | CONCRETE | OPNG. | OPENING |
| CONN. | CONNECT/CONNECTION | OPP. | OPPOSITE |
| CONT. | CONTINUE/CONTINUOUS | PEJ | PREMOLDED EXPANSION JOINT |
| COORD. | COORDINATE | PROJ. | PROJECTION |
| DBL. | DOUBLE | PSF | POUNDS PER SQUARE FOOT |
| DEMO. | DEMOLISH/DEMOLITION | PSI | POUNDS PER SQUARE INCH |
| DET. | DETAIL | P.T. | PRESSURE TREATED |
| DIA. | DIAMETER | REINF. | REINFORCED/REINFORCING |
| DIAG. | DIAGONAL | REQ'D. | REQUIRED |
| DWGS. | DRAWINGS | SECT. | SECTION |
| EA. | EACH | SIM. | SIMILAR |
| E.F. | EACH FACE | STD. | STANDARD |
| E.W. | EACH WAY | STRUCT. | STRUCTURAL |
| ELEV. | ELEVATION | S.W. | SHORT WAY |
| EMBED. | EMBEDDED/EMBEDMENT | THK. | THICK |
| EQ. | EQUAL/EQUALLY | T.O. | TOP OF |
| EXIST. | EXISTING | TYP. | TYPICAL |
| F.F. | FINISHED FLOOR | U.O.N. | UNLESS OTHERWISE NOTED |
| FLR. | FLOOR | VERT. | VERTICAL |
| FNDN. | FOUNDATION | W.P. | WORKING POINT |
| FTG. | FOOTING | WWF | WELDED WIRE FABRIC |
| F.V. | FIELD VERIFY | W/ | WITH |

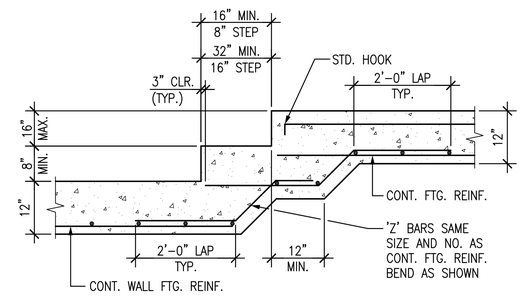


TYPICAL STEPPED FOOTING DETAIL
NOT TO SCALE

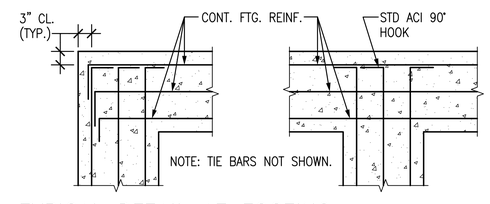


TYPICAL DETAIL AT FOOTING CORNERS AND INTERSECTIONS
NOT TO SCALE

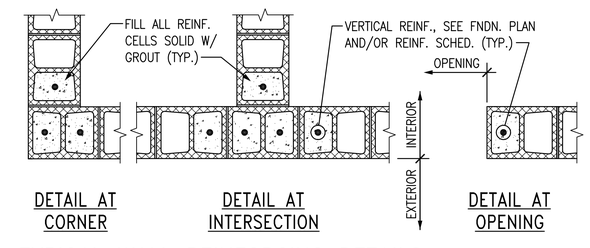


TYPICAL WALL REINFORCING DETAILS
NOT TO SCALE

Copyright 2013 McPherson Design Group, P.C. Any reproduction or unauthorized use of this document or any part of this document without the expressed written consent of McPherson Design Group P.C. is prohibited.

NOT * FOR * CONSTRUCTION
01/15/2016
PROGRESS SET

| DATE: | CAD: | ENG: | REV: | PROJ NO: |
|---|---|---|---|---|
| 1–15–2016 | JK | EA | EA | 15–509 |

6371 Center Drive, Suite 100
Norfolk, Virginia 23502-4102
Phone (757) 965-2001 Fax (757) 965-2001
www.McPhersonDesignGroup.com

| REVISIONS: NO: | DATE: | DESCRIPTION: |
|---|---|---|
| | | |
| | | |
| | | |

McPHERSON DESIGN GROUP p.c.
STRUCTURAL ENGINEERS

4000 MAYFLOWER ROAD
NORFOLK, VIRGINIA

GENERAL NOTES

S0.01

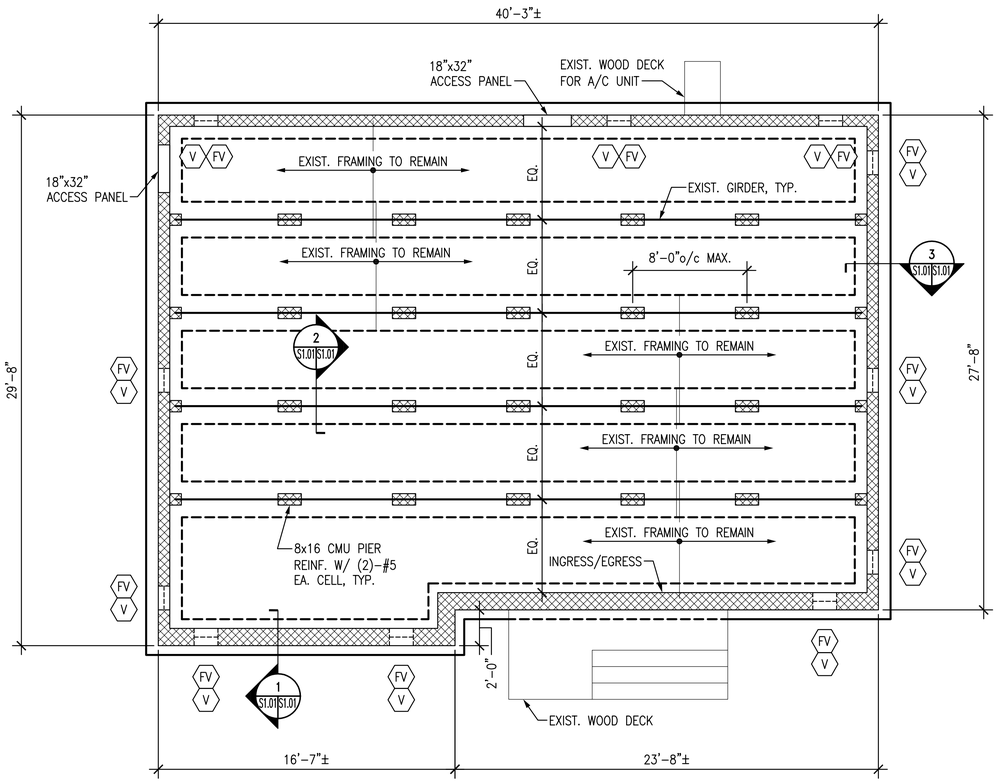


NOTE:

FLOOD VENTS — FV

CRAWL SPACE VENTS — V

## FOUNDATION PLAN

1/4" = 1'-0"

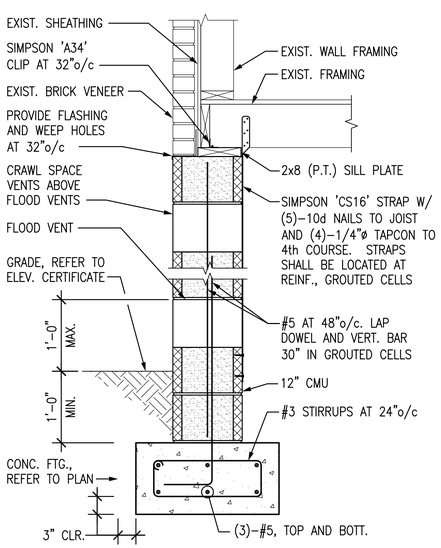


## SECTION 1

1" = 1'-0"

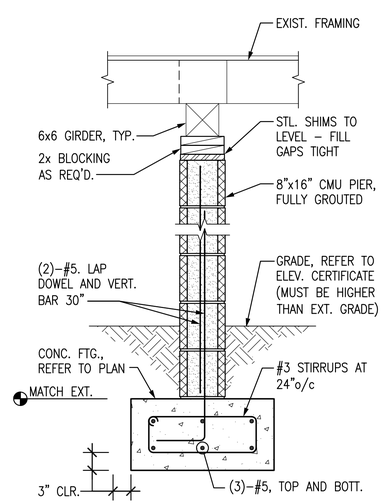


## SECTION 2

1" = 1'-0"

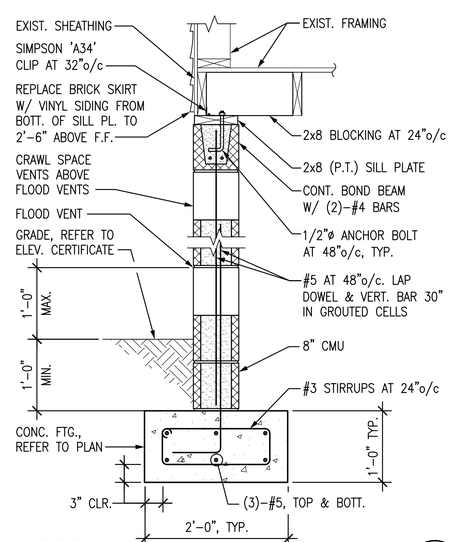


## SECTION 3

1" = 1'-0"

## PLAN NOTES:

1. THE EXISTING TOP OF THE LOWEST FLOOR IS 6.0 FEET. THE BASE FLOOD ELEVATION IN THIS AREA IS 7.6 FEET. THE PROPOSED SILL PLATE (TOP OF CMU) SHALL BE 3 FEET ABOVE THE BASE FLOOD ELEVATION OR 10.6 FEET. THE FLOOR SECTION IS APPROXIMATELY 1.5' (CONTRACTOR TO VERIFY). THE HOUSE WILL BE RAISED APPROXIMATELY 6.1 FEET. WITH A FINAL FINISHED FLOOR ELEVATION OF 12.1 FEET.
2. THE EXACT LOCATION OF MASONRY PIERS SHALL BE COORDINATED WITH FRAMING BEARING POINTS ONCE THE HOUSE IS RAISED.
3. PROVIDE (3)-COURSE HIGH POCKETS AROUND LIFTING STEEL BEAMS.
4. UNABLE TO LOCATE INTERIOR CHIMNEY.
5. FIRST FLOOR IS A CONCRETE SLAB ON GRADE, REMOVE AS REQUIRED FOR NEW FOUNDATIONS.

NOTE: IF THIS DRAWING IS A REDUCTION, GRAPHIC SCALE MUST BE USED.

GRAPHIC SCALE:

1/4" = 1'-0" 5' 0' 5' 10'

1" = 1'-0" 0 1'-0" 2'-0" 3'-0"

*NOT FOR CONSTRUCTION* 01/15/2016

PROGRESS SET

| DATE: | CAD: | ENG: | REV: | PROJ NO: |
|---|---|---|---|---|
| 1-15-2016 | JK | EA | EA | 15-509 |

McPHERSON DESIGN GROUP p.c.
STRUCTURAL ENGINEERS
6371 Center Drive, Suite 100
Norfolk, Virginia 23502-4102
Phone (757) 965-2001 Facsimile (757) 965-2001
www.McPhersonDesignGroup.com

| REVISIONS: NO: | DATE: | DESCRIPTION: |
|---|---|---|
| | | |

4000 MAYFLOWER ROAD
NORFOLK, VIRGINIA

FOUNDATION PLAN AND SECTIONS

S1.01

SHEET 2 OF 2

Copyright 2013 McPherson Design Group, P.C. Any reproduction or unauthorized use of this document or any part of this document without the expressed written consent of McPherson Design Group P.C. is prohibited.